PLAN

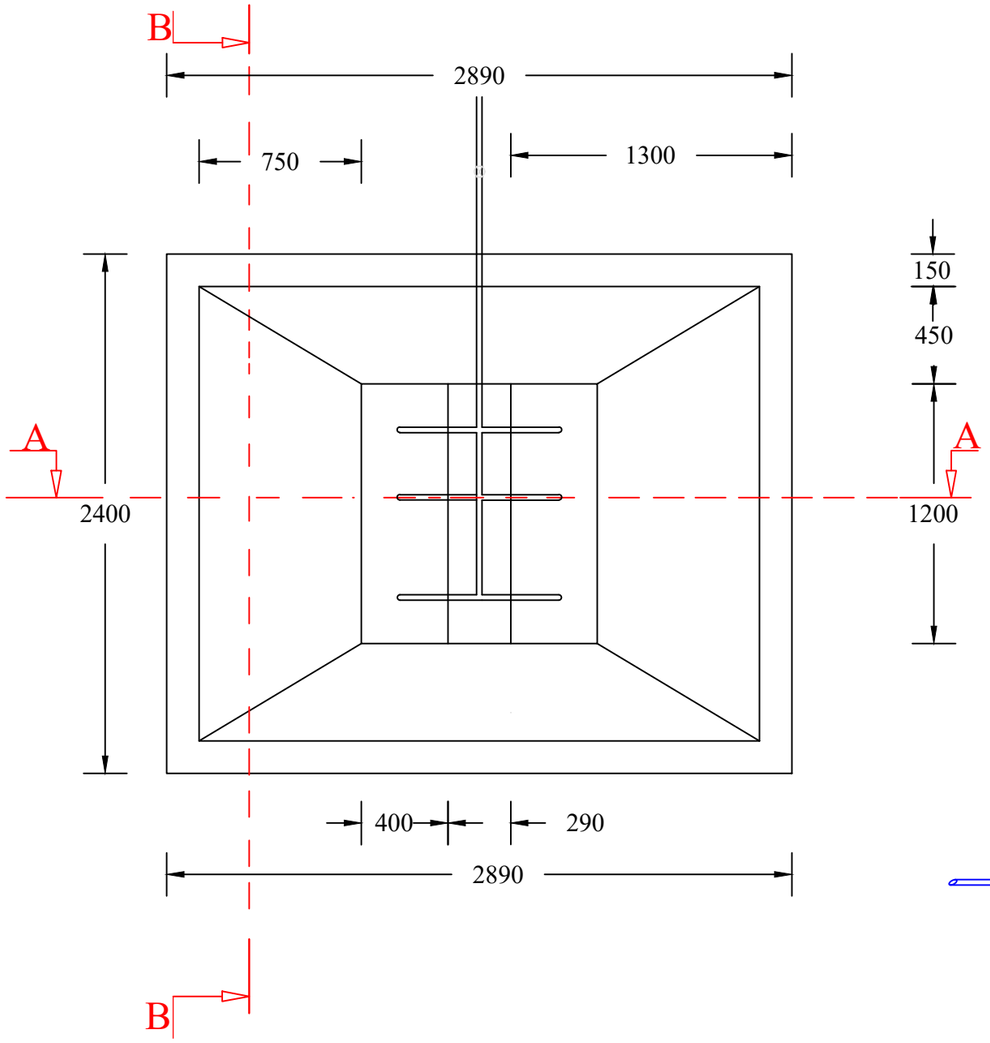

SECTION A-A

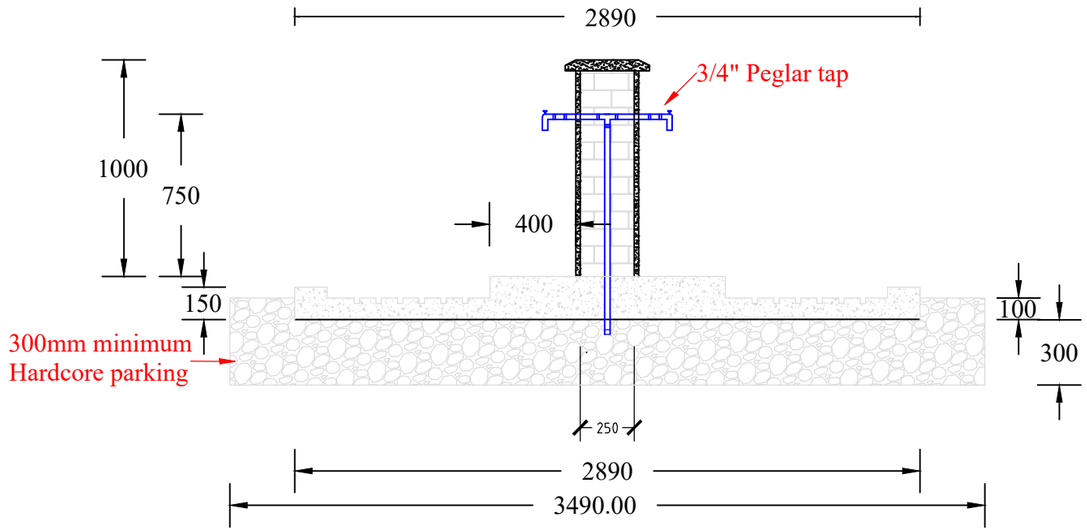

SECTION B-B

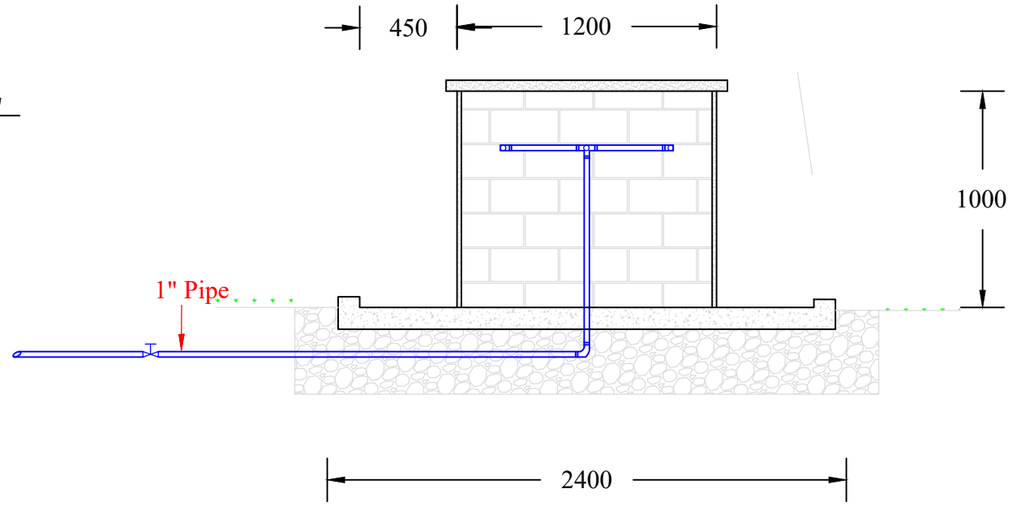

TAPSTAND DESIGN	Designed by:.....	Checked By:.....	Scale: 1:2.4
	Drawn by:.....	Date: April, 2024	DWG NO.....